FOG TITE
INCORPORATED
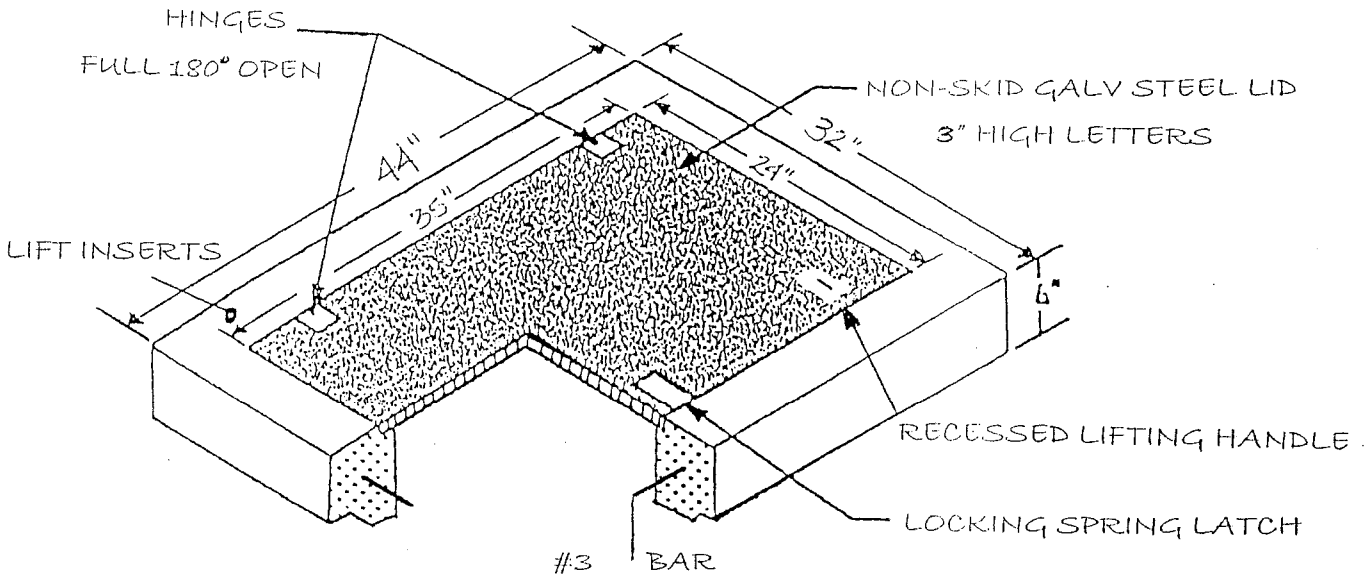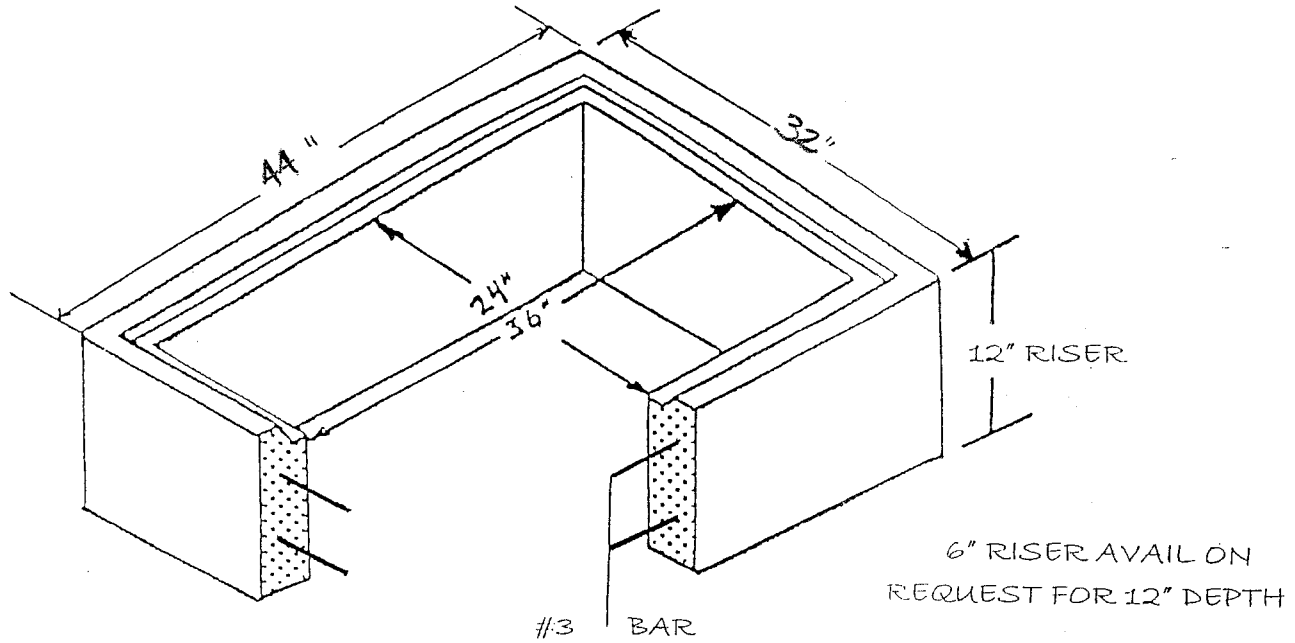
CITY OF SEATTLE TYPE III HH