FOG TITE
INCORPORATED

TRAFFIC BEARING TYPE 4

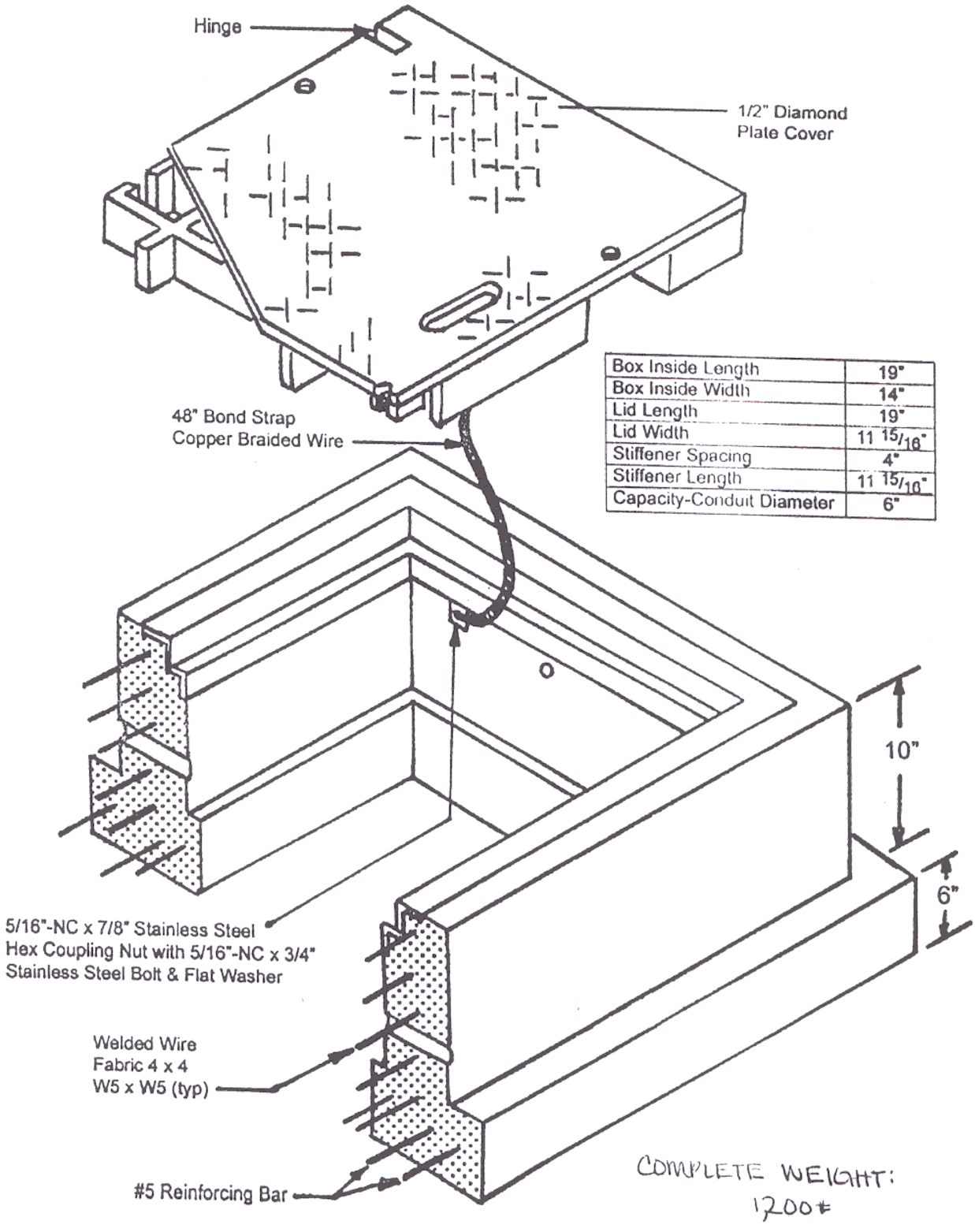

Box Inside Length	19"
Box Inside Width	14"
Lid Length	19"
Lid Width	11 15/16"
Stiffener Spacing	4"
Stiffener Length	11 15/16"
Capacity-Conduit Diameter	6"