FOG TITE INCORPORATED

TRAFFIC BEARING TYPE 5 & 6

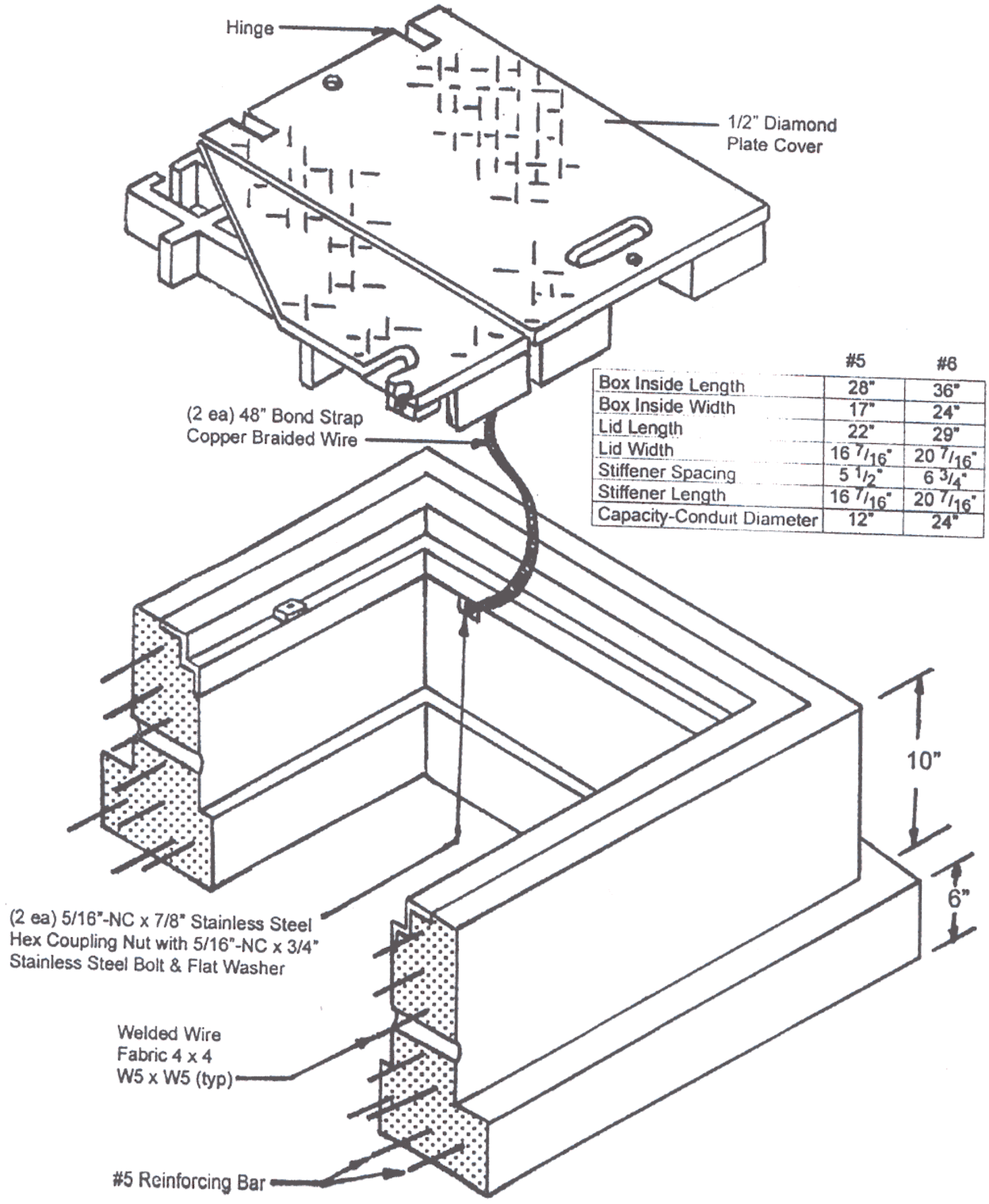

	#5	#6
Box Inside Length	28"	36"
Box Inside Width	17"	24"
Lid Length	22"	29"
Lid Width	16 7/16"	20 7/16"
Stiffener Spacing	5 1/2"	6 3/4"
Stiffener Length	16 7/16"	20 7/16"
Capacity-Conduit Diameter	12"	24"