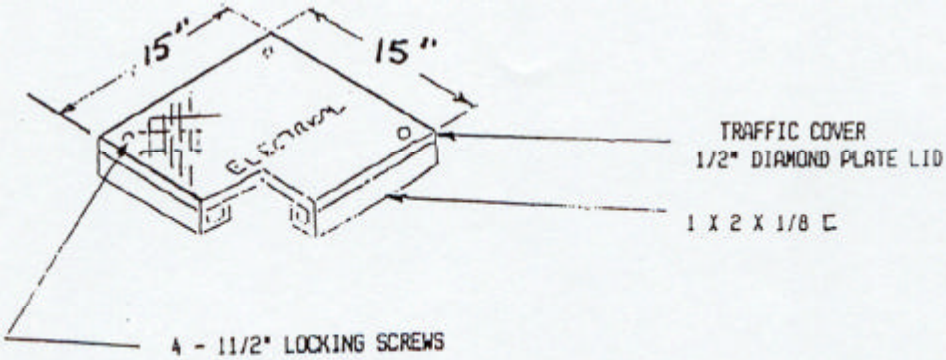
15"
15"
TRAFFIC COVER
1/2" DIAMOND PLATE LID
1 X 2 X 1/8 ⊏
4 - 11/2" LOCKING SCREWS

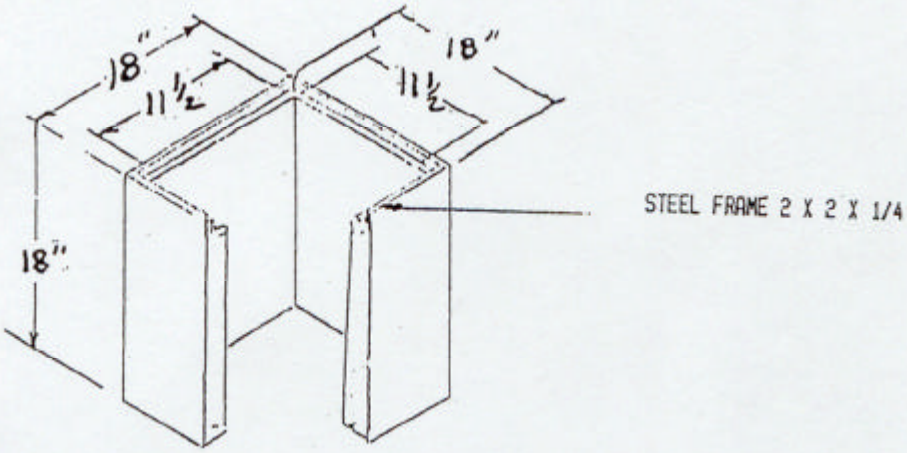
18"
18"
11½
11½
18"
STEEL FRAME 2 X 2 X 1/4